The Best technology and reliability

DAEHWA ACID PROOF PUMP

API 610 PUMP Series







OH Series (OH1)

Single Stage Overhang Pump



Overview

OH-F (OH-C) horizontal overhang pump is end suction, top discharge, single stage, radial split, foot support, API code is OH1 (OH2) ,suit to pumping clean or slightly pollution, chemical neutral or corrosive liquid. Which is designed according to API610.They are kinds of processing pumps with high reliability, long life time, and stable performance, high degree of generalization, high NPSH and efficiency.



OH-C Center support



OH-F Foot support



Water-cooled structure



Air-cooled structure

Performance

Q: up to 2000m³/h H: up to 250m

P: up to 5.0MPa T: -80~+450℃

Application

OH-F、OH-C mainly suit to refinery, petrochemical, coal chemical, paper making, paper pulp, etc.

Structure Specification

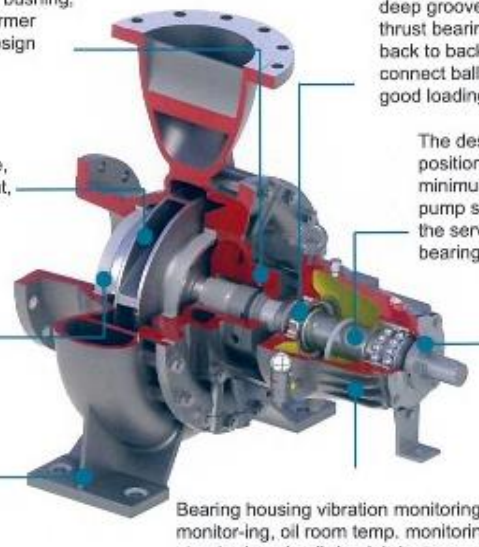

HU Series (OH2)

Heavy Duty Processing Pump



Overview

HU heavy duty processing pump is horizontal, single-stage, single-suction overhung centrifugal pump, which is designed according to API610 and API682, requirement stage A(heavy duty). They are kinds of processing pumps with high reliability, long lifetime, and stable performance, high degree of generalization(same performance curves as HA), high NPSH and efficiency.

Performance

Q: up to 2000m³/h H: up to 220m

P: up to 13.5MPa T: -80~+450℃

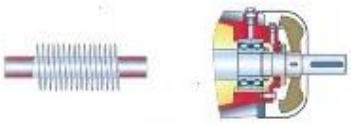

Water-cooled structure Air-cooled structure

Bearing cooling methods: air cooling, water cooling and fan cooling

Application

Applied in oil refinery, petrochemical industry, coal processing industry, chemical industry, fiber and general processing industry, energy engineering, medium and large heating and air conditioning plants, environmental protection projects

Structure Specification

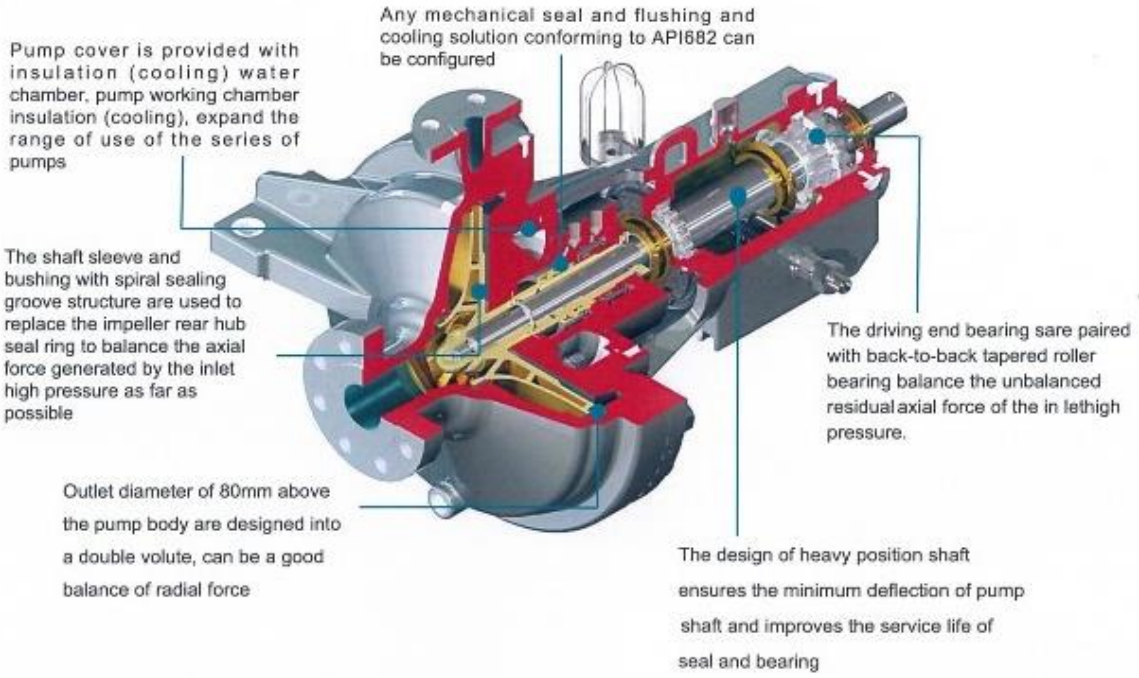

OHV Series (OH3)

Vertical Pipeline Pump



Overview

OH-V type have bearing housing, API code is OH3, suit to pumping clean or containing trace partial liquid, but also pumping flammable , explosive, toxic liquid, small footprint, save foundation investment.

Performance

Q: up to 2400m³/h H: up to 250m

P: up to 5.0MPa T: -60~+200℃

Application

Mainly use for petrochemical, Hydrocarbon Processing, refinery, pipe booster, water supply and water treatment, etc.

Structure Specification

Radial bearing is 6200 series deep groove ball bearing, thrust bearing is 7300 series back to back angular connect ball bearing, have a good loading ability

There is a bearing frame between the motor and the pump, which can be used in higher temperature and more important occasions

Impeller enclosed and open type, meet -different liquid requirement, impeller nut is SPL

Compared with the horizontal pump with the same performance, the vertical pipeline pump has a smaller footprint and simple pipeline connection, saving the investment cost of the foundation

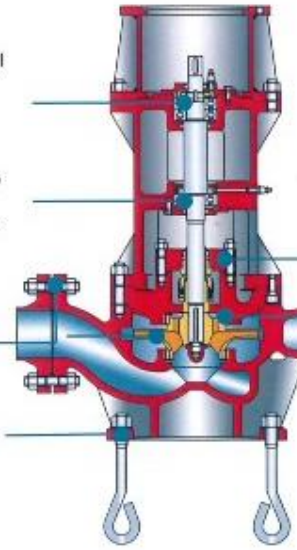

Casing cover have throat bushing, cooling and warming charmer optional, seal-charmer design comply to API682

Wear ring use screw fix with casing(casing & cover),impeller, easy to replace spare clearance of seal ring comply to API standard

When the outlet diameter is above 80mm (including 80mm), the pump body adopts the form of double volute design, which can effectively eliminate the radial force, reduce the vibration of the pump, and make the pump run more smoothly.

A Series (BB1 Two-Stage)

Axial Split Horizontal Centrifugal Pump



Overview

A series pump is axial split, single or two stage, volute type, both ends of the support horizontal centrifugal pump, can also be designed for vertical structure. Suitable for conveying a variety of clean or containing trace particles, neutral or corrosive media.

A Series pumps comply with API610 10th/11th standard.

Performance

Q: up to 3600m³/h H: up to 440m

P: up to 5.0-15.0MPa T: -40~+200℃

Application

It is widely used in various industrial processes, sewage treatment, power station, thermal power plant, pipe network pressure, crude oil or refined oil transportation, natural gas transportation, hydraulic irrigation, water supply and water treatment, Marine pump, seawater desalination and other occasions.

Typical working conditions are used for lean liquid pump, rich liquid pump and hydraulic turbine in large ammonia plant, and main pipeline pump in crude oil or refined oil transportation projects.

Structure Specification

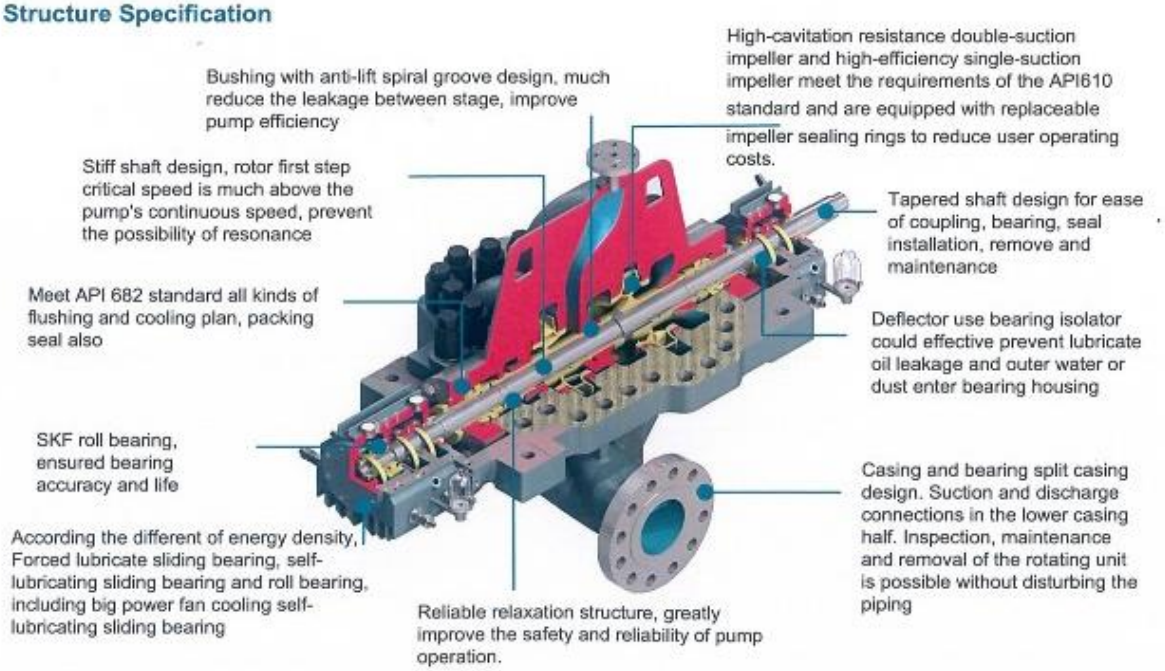

A Series (BB1)

Axial Split Horizontal Centrifugal Pump



Overview

A series pump is axial split, single or two stage, volute type, both ends of the support horizontal centrifugal pump, can also be designed for vertical structure. Suitable for conveying a variety of clean or containing trace particles, neutral or corrosive media.

A Series pumps comply with API610 10th/11th standard.

Performance

Q: up to 12000 m³/h H: up to 440 m

P: up to 5.0-15.0 MPa T: -40~+200 ℃

Application

Applied in various industrial processes, sewage treatment, power station, thermal power plant, pipe network pressure, crude oil or refined oil transportation, natural gas transportation, hydraulic irrigation, water supply and water treatment, Marine pump, seawater desalination and other occasions.

Typical working conditions are used for lean liquid pump, rich liquid pump and hydraulic turbine in large ammonia plant, and main pipeline pump in crude oil or refined oil transportation projects.

Structure Specification

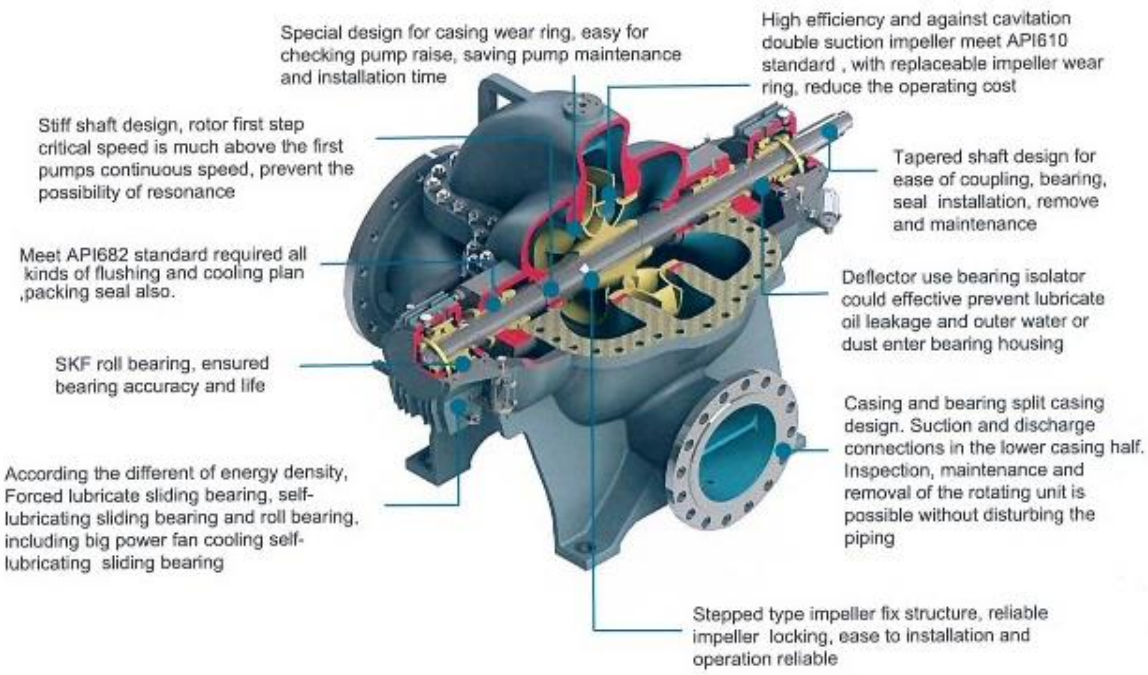

A-P Series (BB1)

Pipeline Pump





High power self lubricating plain bearing

Overview

A-P series pipeline pump is A horizontal centrifugal pump with axial split, single or two stage, volute type and two ends supported, which is specially designed for the transmission of crude oil and finished oil and other medium pipelines under series high pressure conditions. This series of pumps are specially designed and optimized in pressure grade, bearing lubrication mode, runner surface treatment, pump group insulation and other aspects. A-P series pumps comply with API610 10th/API610 11th.

Performance

Q: up to 5500m³/h H: up to 400m

P: up to 5.0-15.0MPa T: -40~+200℃

Application

Typical working conditions for crude oil and refined oil in the process of pipeline transport main pump and feed oil pump. It can also be used for lean liquid pump, rich liquid pump and fluid permeability equality in large ammonia plant

Structure Specification

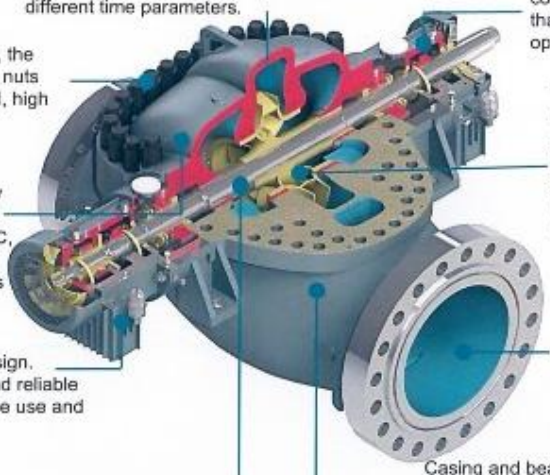

Volute can be designed as a flow guide structure to meet the requirements of the same project, different time parameters.

Pump group to each point temperature, vibration, pressure difference, seal leakage and other comprehensive monitoring, to ensure that the unit can be safe and stable operation.

Body cover strengthening design, the application of high strength bolts, nuts to ensure the pump in high speed, high head safe and stable operation.

The high efficiency and high cavitation resistance double suction impeller meets the requirements of the API610 standard. The replaceable sealing ring of the impeller reduces the operating cost of users.

Considering the characteristics of oil products according to the different viscosity of the unit for heat preservation + heattracing design, generally less than 10℃, heattracing start, greater than 30℃, heat preservation by assembly drawing stainless steel insulation board.

The pump body and impeller runner surface is made of high efficiency and anti-wear coating composed of polymer composite material, which can improve the pump efficiency and prolong the service life of the pump.

High power lubrication sliding bearing design. Underthe premise of ensuring the safe and reliable operation of the pump, greatly facilitate the use and maintenance of users.

Casing and bearing split casing design. Suction and discharge connections in the lower casing half. Inspection, maintenance and removal of the rotating unit is possible without disturbing the piping

Stiff shaft design, rotor first step critical speed is much above the first pumps continuous speed, prevent the possibility of resonance

HR Series (BB2)

Radial Split Horizontal Centrifugal Pump





Top inlet , Top out-let



Side inlet , Top outlet

Overview

HR series single stage is horizontal, between bearing support radial split, double volute, single stage single suction or double suction impeller centrifugal pump. This type of pump used for all kinds of middle high temp, low temp, high pressure etc. heavy duty centrifugal pump, according the piping required to free select pump suction and discharge direction.

HR series pump comply to API 610 l0th/11th.

Performance

Q: up to 4500m³/h H: up to 250m

P: up to 5.0-15.0MPa T: -80~+450℃

Application

All kinds of refinery, petrochemical, coal chemical, Nature gas process, desalination, FPSO and other high temp. low temp or high pressure condi-tion. Pumping particle, corrosive or highly corrosive, LPG or other flam-mable, toxic liquid.

Structure Specification

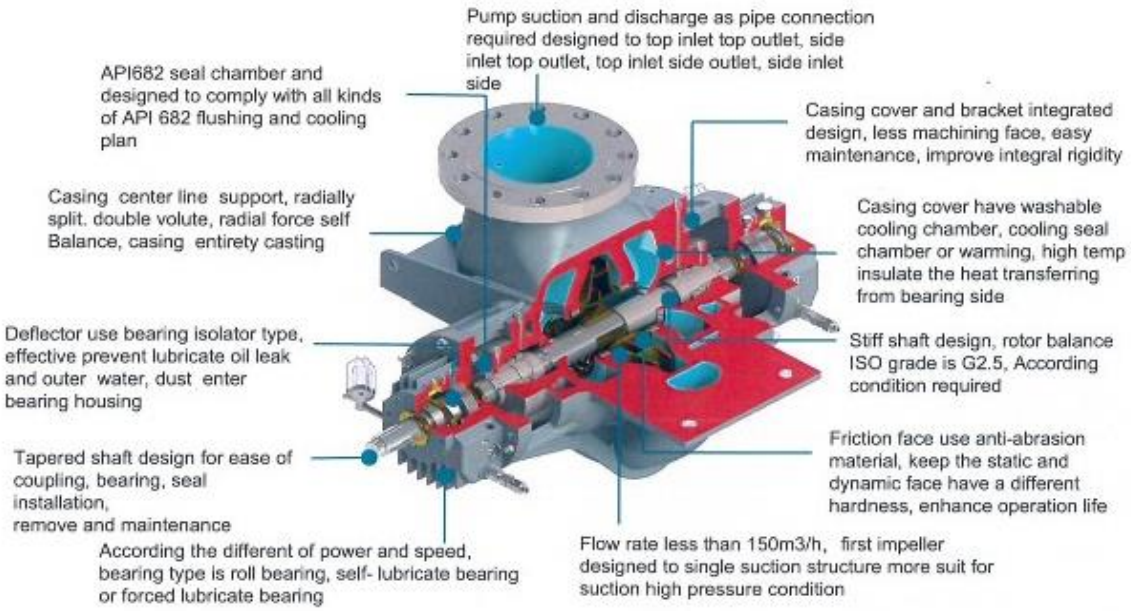

HR Two- Stage Series (BB2)

Radial Split Horizontal Centrifugal Pump



Overview

HR series 2 stages is horizontal, between bearing support, radial split, double volute,2 stages single suction or double suction impeller cen-trifugal pump. This type of pump used for all kinds of middle high temp, low temp, high pressure, etc. heavy duty centrifugal pump, according the piping required to free select pump suction and discharge direction.

HR series pump comply to API 610 10th/11th

Performance

Q: up to 3000m³/h H: up to 440m

P: up to 5.0-15.0MPa T: -80~+450℃



Top inlet , Top out-let



Side inlet , Top outlet

Application

All kinds of refinery, petrochemical, coal chemical, Nature gas process, desalination, FPSO and other high temp. Low temp or high pressure condition. Pumping particle, corrosive or highly corrosive, LPG or other flammable, toxic liquid.

Structure Specification

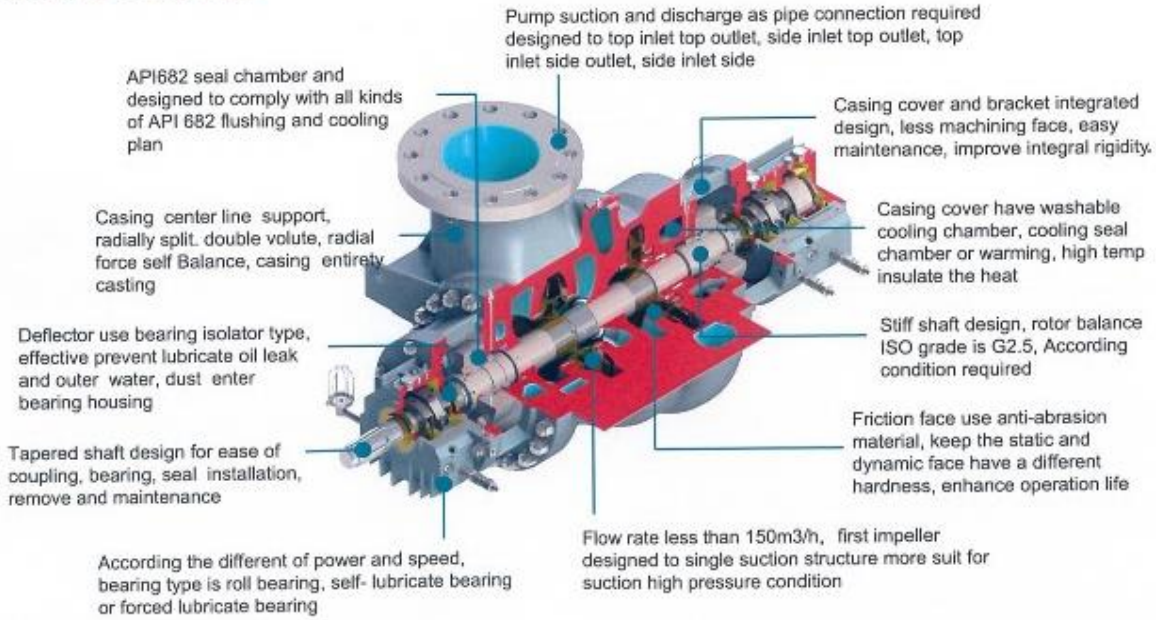

HR Three- Stage Series (BB2)

Radial Split Horizontal Centrifugal Pump





Top inlet , Top out-let

Overview

HR series 3 stages is horizontal, between bearing support, radial split, double volute, and 3 stages impeller centrifugal pump. This type of pump used for all kinds of high flow, high head condition.

HR series pump comply to API 610 10th/11th. 3 stages beyond the definition of BB2,but comply to API 610 10/11th in design and manufacturing.

Performance

Q: up to 3000m³/h H: up to 660m

P: up to 5.0-15.0MPa T: -80~+450℃

Application

All kinds of refinery, petrochemical, coal chemical, Nature gas process, desalination, FPSO and other high temp. low temp or high pressure condi-tion. Pumping particle, corrosive or highly corrosive, LPG or other flam-mable, toxic liquid.

Structure Specification

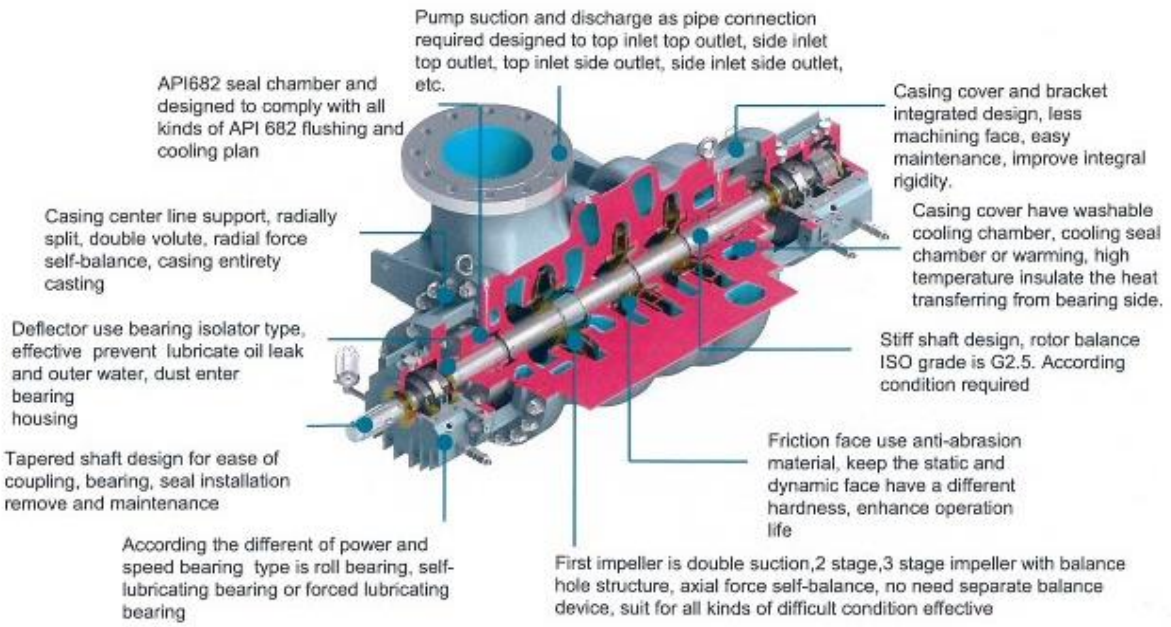

MA Series (BB3)

Radial Split Horizontal Centrifugal Pump



Overview

MA series pumps is axial split, opposed impeller, volute type, horizontal, multistage, first impeller single or double suction, used for pump all kinds of clean or Neutral corrosion liquid, pumping contain particle liquid more stable .

MA series pump comply to API 610 10th/11th.

Performance

Q: up to 1400m³/h H: up to 2000m P: up to 25.0MPa T: -60~+200℃

Application

Mainly used in chemical industry, coal chemical industry, pipeline transportation, offshore platform, oil exploitation, etc., can also be used in the chemical industry of high pressure hydraulic energy recovery turbine. In typical working conditions, it is used for ash water pump, lean methanol transport pump in coal chemical industry, pipeline transport main pump and branch pump in crude oil transport industry, lean liquid pump and rich liquid pump in fertilizer and synthetic ammonia plant, power plant boiler feed pump, oil field injection pump, offshore platform pump, etc.

Structure Specification

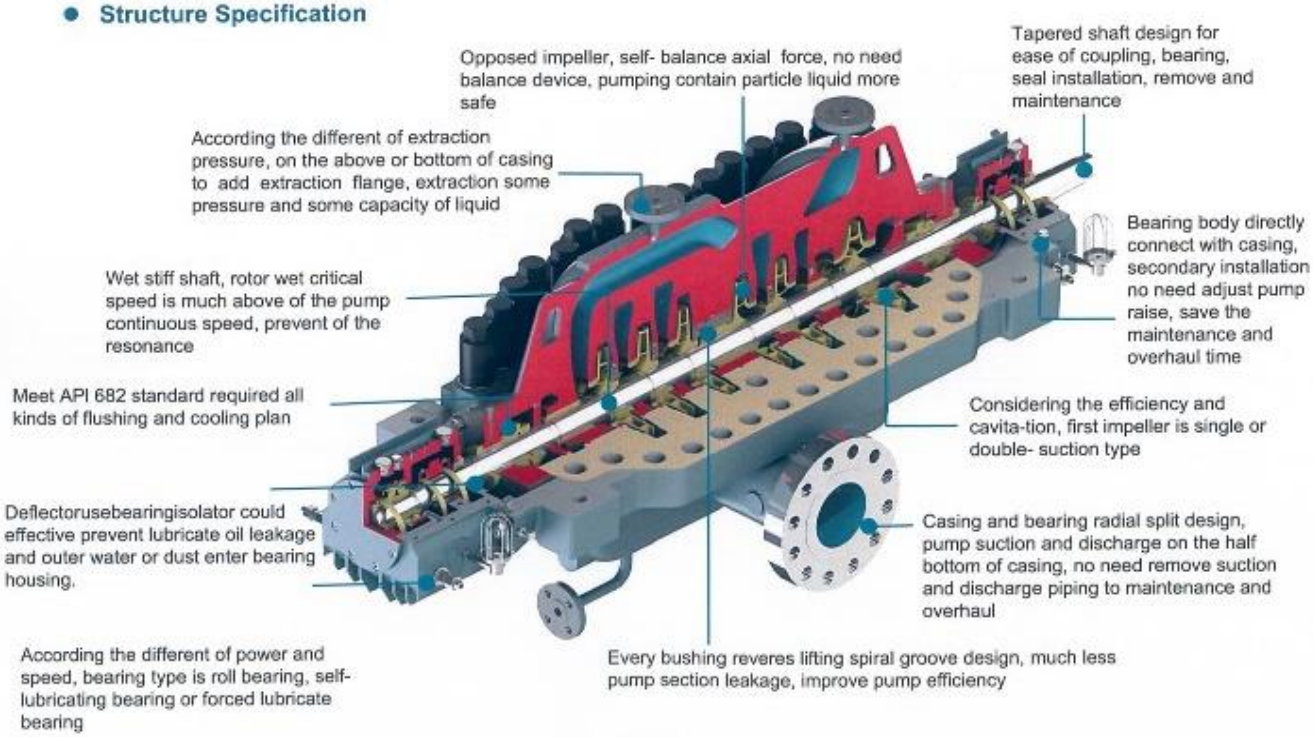

M Series (OH1)

Radial Split Horizontal Centrifugal Pump



Overview

M series is horizontal, single casing, multistage, first impeller single suction or double suction, used for refinery, petrochemical, and power plant. Pumping no particle petroleum, LPG and other flammable or toxic high temp, high pressure liquid .

M series pump comply to API 610 10th/11th .

Performance

Q: up to 1200m³/h H: up to 2000m P: up to 25.0MPa T: -80~+250℃

Application

Applicable to petroleum refining industry, petrochemical industry, coal chemical industry, electric power industry, mining metallurgy industry, paper industry, seawater desalination industry, offshore platform and ship, civil water supply, etc. Typical working conditions for medium and high pressure boiler feed pump, gas pump, ash pump, mine metallurgy industry mine drainage pump, civil high-rise water pump, etc.

Structure Specification

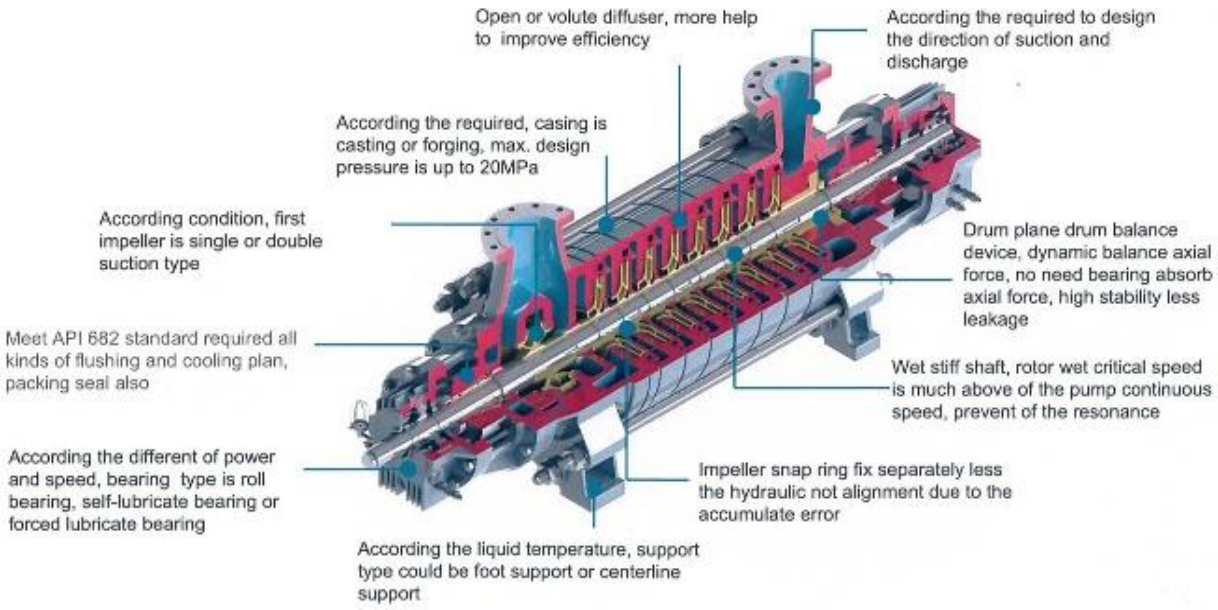

T Series (BB5)

Radial Split Horizontal Centrifugal Pump

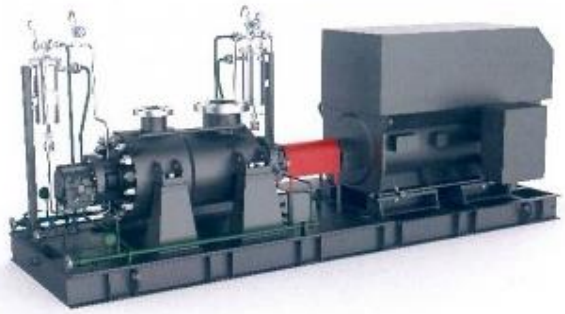

Overview

T-G series pump is horizontal double casing, inter sectional type, impeller in same way, first impeller single suction or double suction multistage cen-trifugal pump, used for refinery, petrochemical, petroleum transportation product oil, LPG, lighter hydrocarbon, flammable, toxic high temp. high pressure liquid .

T series pump comply to API 610 10th/11th .

Performance

Q: up to 1200m³/h H: up to 3600m P: up to 42.0MPa T: -80~+450℃

Application

Suitable for petroleum exploitation, petroleum refining industry, petrochemical industry, coal chemical industry, electric power industry, mining metallurgy industry, offshore platform, etc. Typical working conditions are used in oil refining industry hydrogenation feed pump and hydraulic turbine, oil field injection pump, coke pump, high pressure boiler feed pump in chemical industry and electric power industry, descaling pump in metallurgical industry, etc.

Structure Specification

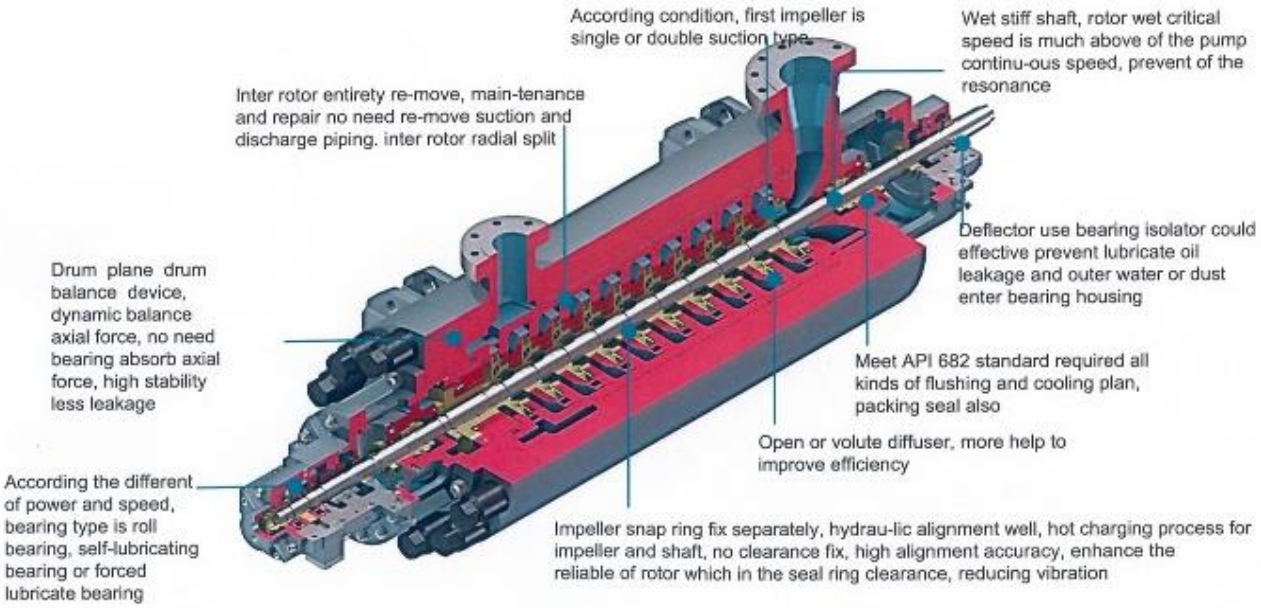

HY Series (VS4)

Vertical Centrifugal Pump



Overview

VS4 series comply API610 11th designed to 3 type:

1-HL type vertical single or multistage, first impeller single suction centrifu-gal pump is suspended long shaft submerged sulfur pump, used for pumping sulfur liquid

2-HY type vertical single or multistage, first impeller single suction centrifu-gal pump, used for pumping all kinds of clean, polluted, low temp. or high temp. liquid, chemically neutral, corrosive liquid, especially pumping waste water, waste oil etc.

3-HRY type vertical single or multistage, first impeller single suction cen-trifugal pump is suspended long shaft submerged high temp.

Performance

Q: up to 2-1000m³/h H: up to 4-125m P: up to 2.5MPa

T: -80~+500℃ Submerge depth:10m

Application

Mainly used for chemical industry, auxiliary system, flue gas desulfurization,

Refinery, petrochemical, waterworks, paper mill, etc.

Structure Specification

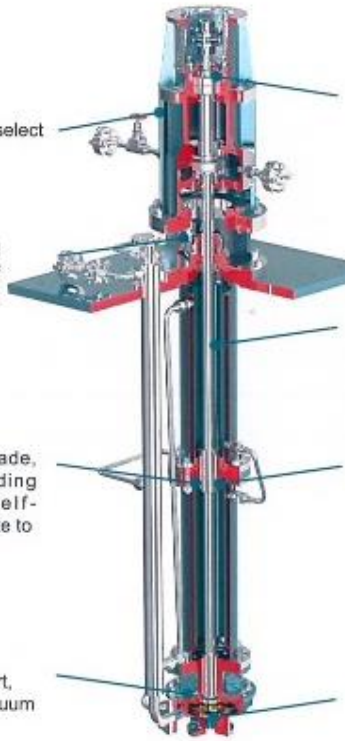

HLB HNB Series (VS5)

Vertical Centrifugal Pump



Overview

HLB and HNB two type comply API 610 10th/11th.

Which are vertical single or multistage, first impeller single suction centrifugal pumps, suspended type, used for all kinds of clean, polluted, low temp. or high temp. liquid, chemically neutral, corrosive liquid, especially pumping sulfuric acid liquid etc.

Performance

Q: up to 3-1200m³/h H: up to 3-60m P: up to 2.5MPa

T: -20~+200℃ Submerge depth: 1.5m

Application

Mainly used for conveying dilute sulphuric acid and medium containing solid particles, chemical industry, petroleum chemical industry, paper making, steel making, steel rolling, com deep processing and other indus-trial sectors etc. HNB series pump is used for pumping concentration between 93% - 98%,temp. lower than 110 ℃ sulfuric acid .

Structure Specification

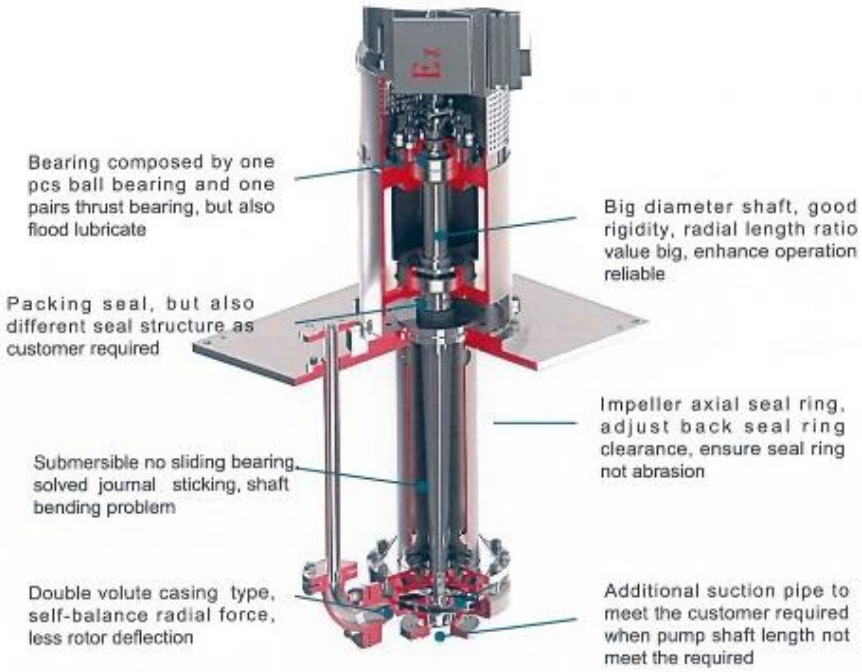

TD Series (VS6)

Vertical Suspended Centrifugal Pump



Overview

TD series is a vertical single or multi-stage centrifugal pump with the single or double-suction first-stage impeller, used for pumping dean or slightly contaminated media, especially for pumping flammable, explosive, vaporiz-able, poisonous or low-temperature liquids.

series TV pumps comply with the design requirements in API 610 l0th/API610 11th.

Performance

Q: up to 800m³/h H: up to 800m

P: up to 10MPa T: -100~+250℃

Application

Mainly used in petroleum refineries, petrochemical and coal chemical industries, condensate pumping, LPG engineering, power plants, cryogenic engineering, pipeline pressure regulation, environment protection engi-neering, sea water desalinization, sea water lift, water treatment, water supply & drainage systems, offshore drilling platforms, oil tankers and other applications. For pumping the media such as sea water, river water, cooling water, sewage and crude oil for large-capacity low-head pumps.

Structure Specification

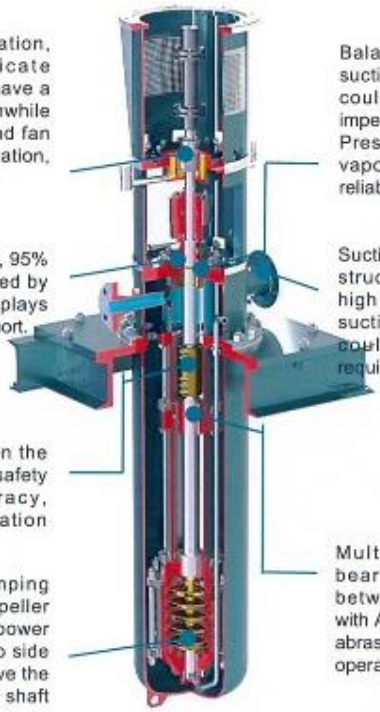

Roll bearing, flood lubrication, special designed lubricate circulate system, bearing have a good lubricate effect ,meanwhile designed water cooling and fan cooling suit all kinds of situation, enhance bearing service life

There is a balancing device, 95% of the axial force is balanced by the balancing device, and plays the role of intermediate support.

Jointed-shaft structure when the sump is long, Jointed-shaft safety and reliable, high accuracy, enhance the pump application range

First impeller sink, pumping medium to secondary impeller suction, low head, lower power consumption, impeller two side have support, much improve the safety and reliable of long shaft multi- stage pump

Balance chamber connect with suction, easy vaporization liquid could connect with secondary impeller, improve seal chamber Pressure, less the possibility of vaporization, enhance the safe reliability

Suction and discharge welding structure, no casting defect, high bearing pressure ability, suction and discharge flange could design as customer required

Multipoint support sliding bearing structure, the span between the bearing comply with API standard required, High abrasion resistant, ensure pump opera-tion reliable

TV Series (VS6)

Vertical Suspended Centrifugal Pump



Overview

TV series is a vertical single or multi-stage centrifugal pump with the single or double-suction first-stage impeller, used for pumping dean or slightly contaminated media, especially for pumping flammable, explosive, vaporiz-able, poisonous or low-temperature liquids.

TV pumps comply with the design requirements in API 610 l0th/API610 11th.

Performance

Q: up to 1000m³/h H: up to 1000m

P: up to 15.0MPa T: -100~+250°C

Application

Mainly used in petroleum refineries, petrochemical and coal chemical industries, condensate pumping, LPG engineering, power plants, cryogenic engineering, pipeline pressure regulation, environment protection engi-neering, sea water desalinization, sea water lift, water treatment, water supply & drainage systems, offshore drilling platforms, oil tankers and other applications. For pumping the media such as sea water, river water, cooling water, sewage and crude oil for large-capacity low-head pumps.

Structure Specification

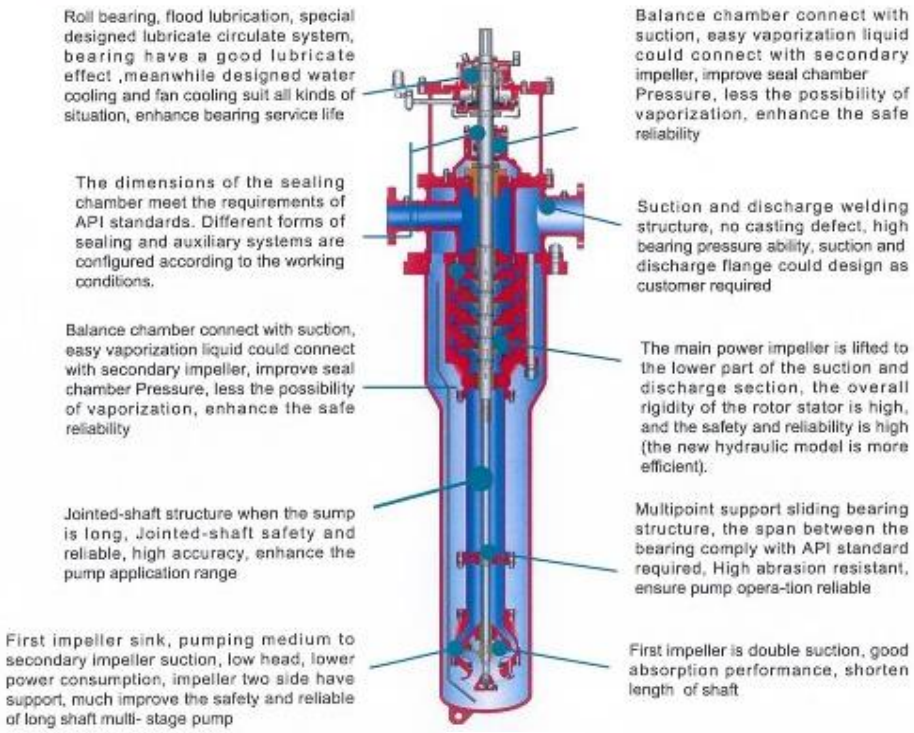

TH Series

Hydraulic Power Recovery Turbine

●Overview

HT series hydraulic power recovery turbine through high pressure liquid drive turbine running, change high pressure energy to rotor motion energy, recovery the margin pressure, after reformed key components, all kinds of pump could be used for HPRT

HT series hydraulic power recovery turbine comply to API 610 l0th/11th

● Performance

Q: up to 20-10000m³/h　　H: up to 3500m　　P: up to -35MPa　　T: -80~+450℃

● Application

Refinery, petrochemical, coal chemical, nature gas process, polysilicon, platforming, heat supply etc. all kinds of margin liquid pressure energy. Typically application is Ammonia desulfurization, decarburization hydraulic turbine, The hydrogenation hydraulic turbine in refinery, polysilicon unit cycle water recovery turbine, LPG Turbine Expansion Engine, desalination high pressure recovery turbine

● Structure Specification

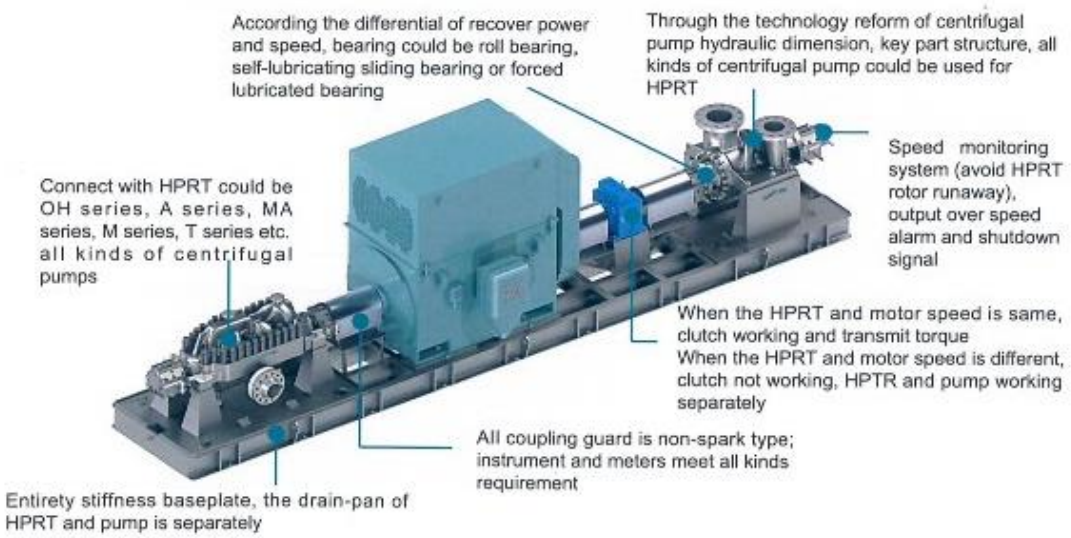

LK Series

Air Separation Pump



Overview

LK-A series main flow pump is vertical, multistage, low temperature centrifugal pump, suitable for conveying a variety of low temperature media (LO2、LN2、LAr).

Performance

Q: up to 1270L/min　　H: up to 1600m

P: up to 16.0MPa　　T: up to -196℃

Application

It is widely used in the internal compression, circulation, transportation and backup system of liquid oxygen, liquid nitrogen and liquid argon.

Structure Specification

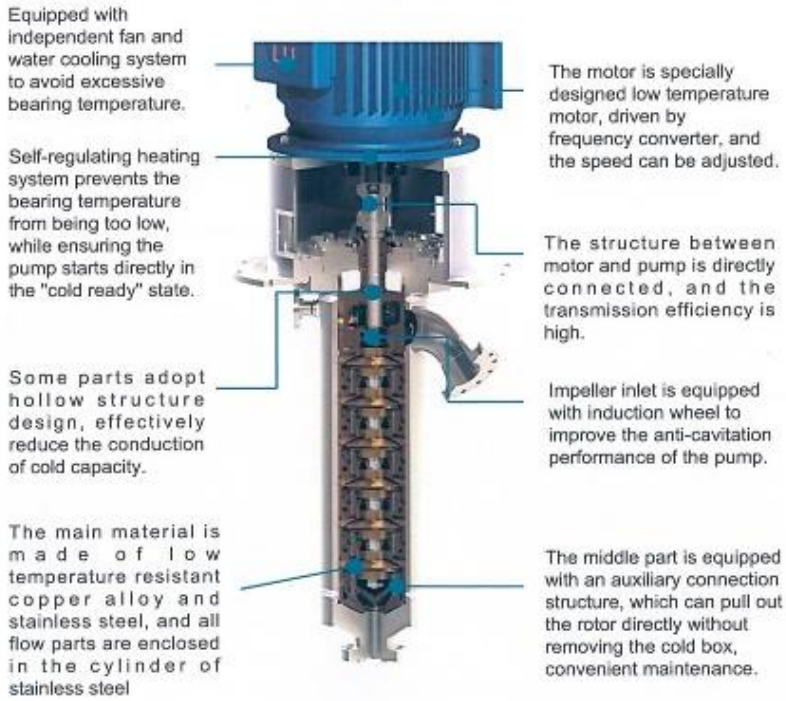

LQ Series
LNG Pump

Overview

LQ-A series is vertical, 1~4 grade, low temperature, no seal, submersible centrifugal pump

Performance

Q: up to 20 m³/h

H: up to 440m

P: up to 5.0MPa

T: up to -196℃

Application

Tank liquid transfer

Mobile liquid transfer（LAr/LN2）

Vehicle fuel depot-LNG.

Structure Specification

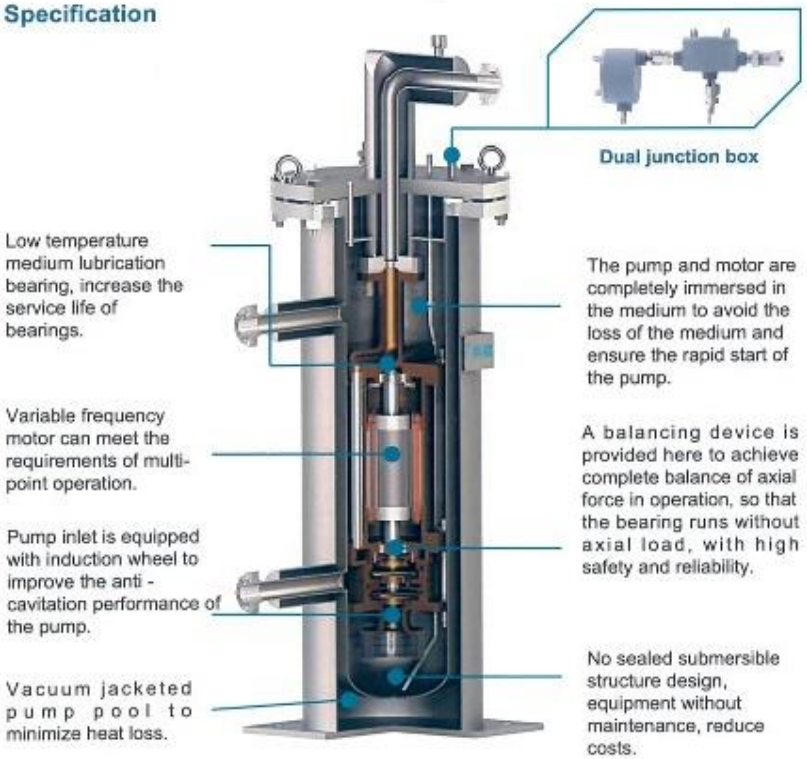

On behalf of, **DAEHWA ACID PROOF PUMP** would like to thank you for your precious time.

Please feel free to contact us. thank you.

J. W. KIM / President



DAEHWA ACID PROOF CO.,LTD.
Website : http://www.dacopump.co.kr
Email : dacopump@naver.com
TEL : +82-31-998-8974 FAX : +82-31-998-0729
Office & Factory : 24, Samdogongdan-ro 85beon-gil, Yangchon-eup,
Gimpo-si, Gyeonggi-do, Republic of Korea